PACIFIC ENERGY

CANADA'S FINEST STOVES

WOOD CATALOGUE **2020**

MADE IN CANADA, FOR CANADIAN WINTERS

PACIFIC ENERGY

CANADA'S FINEST STOVES

LIMITED
PACIFIC ENERGY
10 YEAR
PACIFICENERGY
FIREPLACE PRODUCTS
WARRANTY

Pacific Energy extends the following warranty coverage to the original registered purchaser of the product:

10 Year Coverage

10 year coverage is extended to the following components (parts only) porcelain finish, glass (glass for thermal breakage only, not impact), plating, firebox and baffle.

3 Year Comprehensive

Pacific Energy will replace or repair any part found to be defective (parts and labor) for three years from the date of purchase.

This coverage includes electrical components (fans, speed controls and thermal switches).

Landcare Australia

Pacific Energy Fireplace Products Ltd proudly supports the activities of Landcare Australia through its membership of the AHHA

STEEL RANGE

PAGE **7**

VISTA | 180–200 m²

SUPER | 250–280 m²

SUMMIT | 280–300 m²

ALDERLEA
Cast Iron Over Steel

PAGE **9**

ALDERLEA T4 | 180–200 m²

ALDERLEA T5 | 250–280 m²

ALDERLEA T6 | 280–300 m²

PAGE **13**

ALDERLEA T5 INBUILT | 250–280 m²

NEO SERIES

HIGH EFFICIENCY

PAGE **11**

NEO 1.6 | 200–230 m²

NEO 2.5 | 280–300 m²

PAGE **15**

NEO 1.6 INBUILT | 200–230 m²

NEO 2.5 INBUILT | 280–300 m²

ALBERNI SERIES

HIGH EFFICIENCY

PAGE **17**

ALBERNI 2.5 | 280–300 m²

PAGE **17**

INDUSTRY LEADING TECHNOLOGIES

1 SINGLE **LEVER**
AIR CONTROL

It's never been simpler to achieve a clean, efficient flame. With Pacific Energy systems, a single, easy-to-operate air control lever can regulate the entire burn.

2 BAFFLE **SYSTEM**

Pacific Energy is a recognised industry leader in "clean burn" technology, as exemplified in our unique high capacity baffle system for preheating secondary combustion air for re-burning. By burning the combustible elements in the air, we improve our heaters environmental performance while significantly reducing the amount of wood that is consumed.

The design and construction of our baffles is second to none: these removable hollow chambers are precisely formed and perforated to allow a continuous, controlled flow of secondary air—with no moving parts. Constructed from fully seam welded 304 grade, non-ferrous stainless steel they ensure efficient combustion of secondary air throughout the entire burn cycle. Like every component in a Pacific Energy wood heater, they are guaranteed to perform for a lifetime.

3 EBT **EXTENDED BURN**
TECHNOLOGY

Our second-generation Extended Burn Technology, or EBT2, precisely regulates secondary airflow based on vacuum created by the chimney for a longer, cleaner, more economical burn. This automatically adjusts the secondary combustion system, for a cleaner, more efficient burn and extended burn time.

CAST IRON **OVER STEEL**

Until we pioneered the Alderlea line, and its revolutionary iron-wrapped steel firebox, a cast iron firebox was just that: cast iron. The Alderlea design makes the most of each metal: the floating steel firebox is free to expand and contract, and its design maximizes convective heat efficiency, while the cast iron wrapping provides radiant heat. This superior system greatly extends longevity over an all cast firebox. Metal fatigue is no longer a factor, allowing us to offer the industry's first lifetime warranty on a cast wood heater.

This technical innovation lives "under the skin" of the Alderlea line, which maintains the beloved traditional wood heater appearance. We say it's "powered by design, and crafted by tradition".

4 SELF SEALING **ASH DUMP**

Our self-sealing ash dump, with its spring-loaded door provides a time saving, hassle-free ash removal solution that, frankly, has yet to be equaled. Serious wood burners utilise ash removal systems. Many stoves simply have a removable cover over their ash removal opening inside the firebox. Pacific Energy's machined steel, spring loaded ash removal system is opened from outside the heater and closes automatically for safety and convenience when you're done.

5 AIR **WASH**
A SYSTEM BY PACIFIC ENERGY

Soot-covered fireplace glass? Not likely with Pacific Energy heaters. Over 30 years ago, we pioneered the use of glass doors on free standing wood heaters. We followed that with the first effective airwash manifold system, a design that flows preheated air to the glass surface to keep it clean.

Over the years we have continued to refine our airwash design: it now creates a high-pressure zone in the center and forces air to flow from above and across the glass. Even at low air settings, we are confident that our airwash system is the most effective available. And that our glass doors are among the cleanest in the industry.

6 KNIFE **EDGE DOOR**

A formed and welded knife edge opening creates a superior air tight seal to the door while strengthening the heater face. This is a more labor intensive design but our experience has proven this is the best way to manufacture a fireplace.

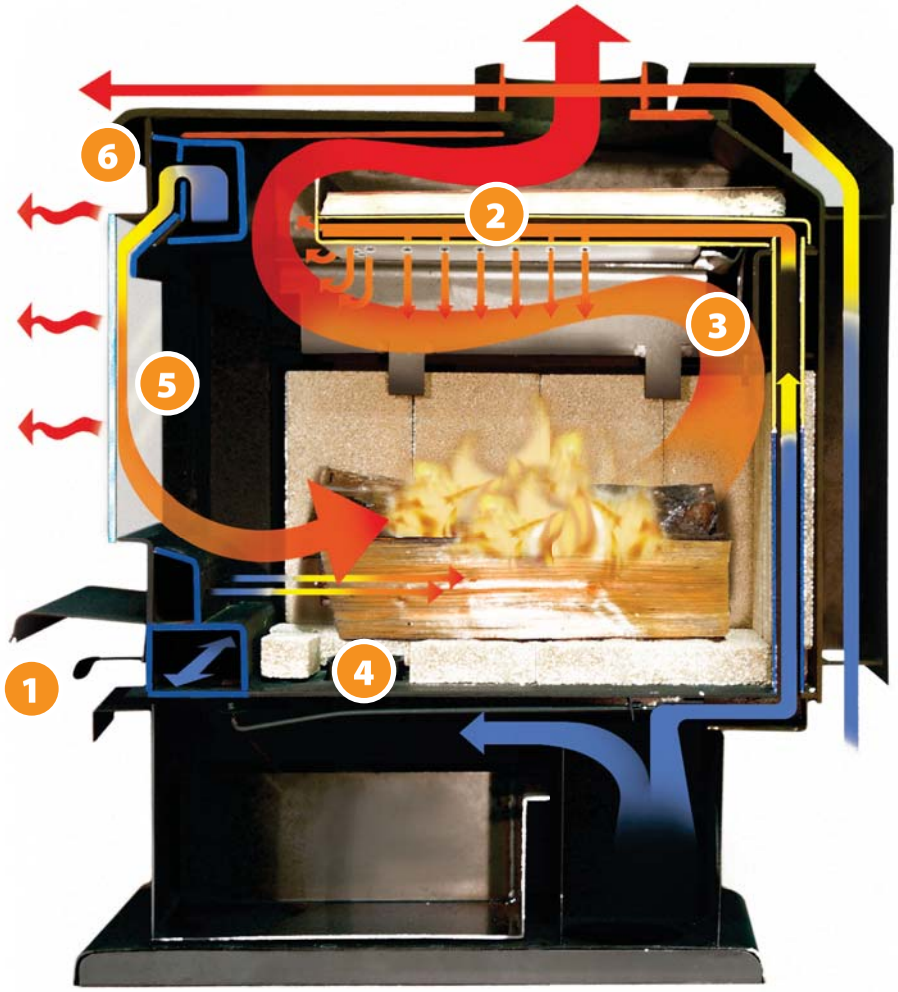

OUTSIDE AIR

High efficient homes with double glazed windows and 5+ stars are extremely air tight, so much so that when even an exhaust fan is turned on your home can become negative pressured.

Negative house pressure is a common problem that can cause fireplaces and wood-burning appliances to smoke. This is probably the least understood house issue, but one that usually can be easily corrected.

Pacific Energy has an optional fresh air intake kit making it easy to run a duct outside for fresh air into your wood heater. Adding a fresh air intake is highly recommended for any new home or for homes with people who might be sensitive to particles in the air.

Pacific Energy wood heaters have a designated inlet that allows you to run a duct to outside to bring fresh air in for your fire.

If you have your heater installed on an external wall, the duct can go straight out the back. If you have your heater installed on an internal wall, you can run the duct inside the wall cavity, through the roof to outside.

PACIFIC ENERGY

STEEL RANGE WOOD

VISTA - SUPER - SUMMIT

FEATURES

Reliable catalytic-free technology
Multi-port Combustion Air; creates unique enhanced flame
Airwash Technology; for clear, clean glass
Single-Lever Air Control; one touch control
Fully firebrick lined; enhanced thermal mass
Heavy plate steel top; cooking capable

OPTIONS

Fan with automatic control
Outside Air Adaptor
Self Sealing Ash Dump
Nickel door or legs

DESIGN-A-STOVE

Pacific Energy Steel Range Wood Heaters are customizable in your choice of door and leg finishes.
Available in Nickel and Metallic Black

DOORS

Metallic Black

Nickel

LEGS

Nickel
Metallic Black

VISTA

Legs or Pedestal

Heat Output	**180–200 m²**
Efficiency ★★★★☆☆	67%
Emissions ★★★★☆☆	1.5 gm/kg
Burn Time	6–8 hours
Log Size (max)	40– 45 cm
Weight	125 kg

Despite its compact size, this is a high-performance wood heater, engineered for powerful heat output, high efficiency and ease of use. Combine the features and performance with your choice of door and leg finish, and you have the Vista. Traditional style with state-of-the-art woodburning performance.

VISTA FEATURES
East-West loading
304 Stainless Steel Floating Firebox; 10 year warranty

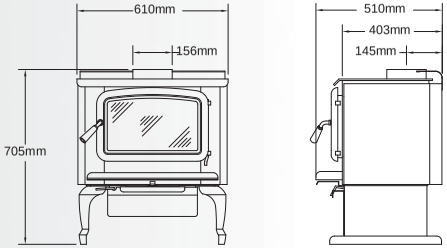

SUPER

Legs or Pedestal

Heat Output	**250–280 m²**
Efficiency ★★★★☆☆	67%
Emissions ★★★★★☆	1.1 gm/kg
Burn Time	8–12 hours
Log Size (max)	45 cm
Weight	161 kg

Our most popular woodburning heater based on our renowned firebox, the Super delivers superb heating performance. With clean air wash technology, our high capacity baffle system and legendary reliability, the Super is built for a lifetime of heat.

SUPER FEATURES
Floating firebox; for extended life
304 Stainless Steel baffle; 10 year warranty
North-South loading

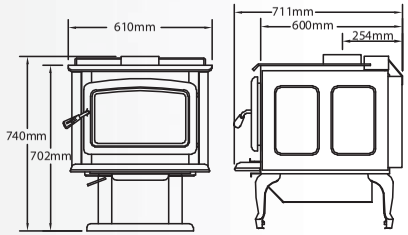

SUMMIT

Legs or Pedestal

Heat Output	**280–300 m²**
Efficiency ★★★☆☆☆	64%
Emissions ★★★★★☆	1.1 gm/kg
Burn Time	10–14 hours
Log Size (max)	45– 50 cm
Weight	197 kg

When you need the heating power to keep a large home warm and comfortable through long winter nights, choose Summit. Crafted for maximum heating capacity with Extended Burn Technology (EBT) for the longest burn time, the Summit is the wood heater of choice for bigger spaces and colder nights. Choose pedestal or a variety of leg and door finishes.

SUMMIT FEATURES
Floating firebox; for extended life
304 Stainless Steel baffle; 10 year warranty
Extended Burn Technology (EBT2); more efficient burning
North-South loading

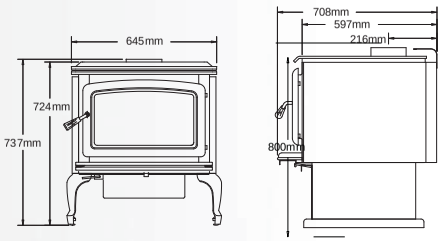

PACIFIC ENERGY

ALDERLEA WOOD

CAST IRON OVER STEEL

T4 - T5 - T6

FEATURES

Reliable non-catalytic technology Multi-port Combustion Air; unique enhanced flame
Airwash Technology; for clear, clean glass
Single-Lever Air Control; one touch control
Floating firebox; for extended life
Fully firebrick lined; enhanced thermal mass
Swing out trivets; for slow cooking
Concealed cooktop
Ash system; for easy cleaning
304 Stainless Steel baffle; 10 year warranty

OPTIONS

Fan with automatic control
Upgrade to Porcelain Enamel Colour; Majolica Brown or Antique White (T4 and T5 only)

ALDERLEA T4

Heat Output	**180–200 m²**
Efficiency ★★★★☆☆	67%
Emissions ★★★★☆☆	1.5 gm/kg
Burn Time	6–8 hours
Log Size (max)	40– 45 cm
Weight	195 kg

The T4 incorporates a huge glass window for a clean view of the flame, warming shelves that swing out to reveal a concealed cook top, efficient heat output and unmatched ease of use. It's a powerful, reliable source of heat with old world charm and unmatched durability.

ALDERLEA T4 FEATURES
Concealed cooktop; fits 15 x 33 cm pan
East-West loading

Upgrade to Porcelain Enamel Colour (based on availability)
Majolica Brown or Antique White

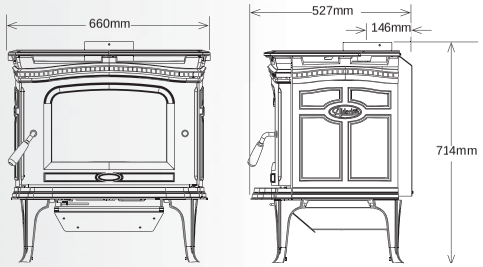

ALDERLEA T5

Heat Output	**250–280 m²**
Efficiency ★★★★☆☆	67%
Emissions ★★★★★☆	1.1 gm/kg
Burn Time	8–12 hours
Log Size (max)	45 cm
Weight	222 kg

With elegant, historic styling that adds to the decor of any room, the T5 combines the best of cast iron and steel stoves: offering radiant and convective heat, with a concealed cooktop and a huge glass window. It's an easy-to-light, easy-to use, long-burning wood heater with old world charm and unmatched durability.

ALDERLEA T5 FEATURES
Concealed cooktop; fits 23 x 28 cm pan
North-South loading

Upgrade to Porcelain Enamel Colour (based on availability)
Majolica Brown or Antique White

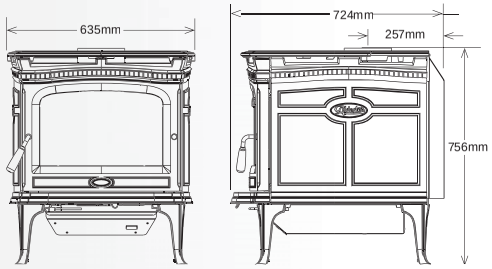

ALDERLEA T6

Heat Output	**280–300 m²**
Efficiency ★★★☆☆☆	64%
Emissions ★★★★★☆	1.1 gm/kg
Burn Time	10–14 hours
Log Size (max)	45– 50 cm
Weight	254 kg

The largest Alderlea wood heater, the T6 is the solution for keeping large spaces warm and comfortable, even through long winter nights. It's crafted for maximum heating capacity, with Extended Burn Technology (EBT) for all-night burn times, and features a family-sized cooktop and a huge glass window.

ALDERLEA T6 FEATURES
Concealed cooktop; fits 30 x 38 cm pan
Extended Burn Technology (EBT)

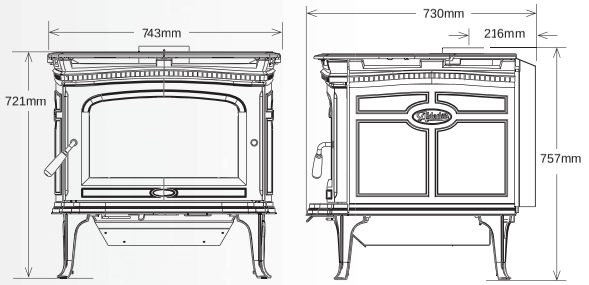

PACIFIC ENERGY

NEO WOOD

NEO 1.6 – NEO 2.5

FEATURES

Reliable non-catalytic technology
Multi-port Combustion Air; creates unique enhanced flame
Airwash Technology; for clear, clean glass
Single-Lever Air Control; one touch control
Ash system; for easy cleaning
Floating firebox; for extended life
Heavy plate steel top; Removable Cast Iron Trivet for cooking
304 Stainless Steel baffle; 10 year warranty
Extended Burn Technology (EBT)
Leveling Legs
East West Loading

OPTIONS

Fan with automatic control
Colour Panel Options

HIGH EFFICIENCY

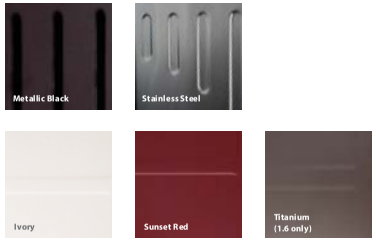

NEO 1.6

Heat Output	**200–230 m²**
Efficiency ★★★★★★	75%
Emissions ★★★★★★	0.7 gm/kg
Burn Time	7–12 hours
Log Size (max)	40– 45 cm
Weight	154 kg

The NEO 1.6 freestanding makes a bold statement with it's tall profile for easy loading, line-of-sight view of the flame, and modern design. Like its larger cousin the NEO 2.5, the NEO 1.6 is a true heating machine with Pacific Energy's solid steel construction, floating firebox with stainless steel baffle and high-efficiency finned heat exchanger. Choose the color that is right for your home with side panels available in a variety of colors.

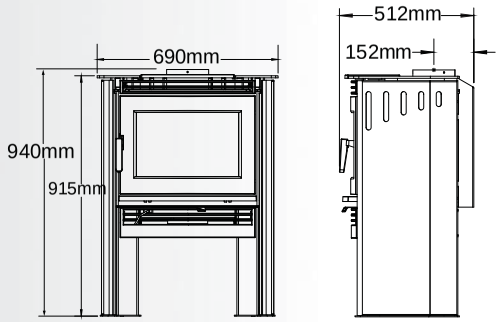

HIGH EFFICIENCY

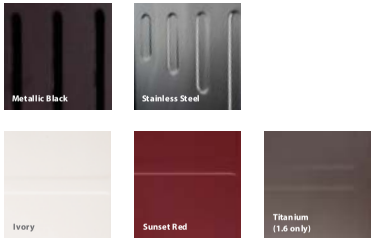

NEO 2.5

Heat Output	**280–300 m²**
Efficiency ★★★★★★	82%
Emissions ★★★★★★	1.0 gm/kg
Burn Time	7–12 hours
Log Size (max)	45 cm
Weight	208 kg

NEO 2.5 offers elegant, modern lines and a large firebox for high heat output. With no-stoop loading, large glass door, and simple air control, the NEO 2.5 is a practical wood heater with Pacific Energy's clean-burning technology that reduces emissions while maximizing burn time and efficiency. It includes all the features and convenience of the NEO 1.6, including optional side panels in a variety of dramatic colors, and the ability to use the top as a cook stove. Installation is simplified with leveling legs for uneven surfaces.

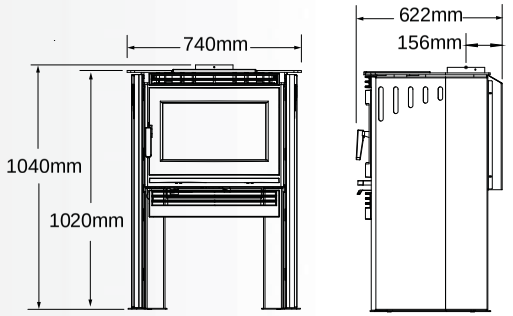

PACIFIC ENERGY

ALDERLEA T5 INBUILT
WOOD

FEATURES
Reliable non-catalytic technology
Multi-port Combustion Air; creates unique enhanced flame
Airwash Technology; for clear, clean glass
Single-Lever Air Control; one touch control
Floating firebox; for extended life
304 Stainless Steel baffle; 10 year warranty
2 x Fans with automatic control
Single-Lever Air Control
North-South loading

OPTIONS
Upgrade to Porcelain Enamel; Majolica Brown or Antique White

Upgrade to Porcelain Enamel Colour (based on availability) Majolica Brown or Antique White

ALDERLEA T5 INBUILT

Heat Output	**250–280 m²**
Efficiency ★★★★☆☆	60%
Emissions ★★★★★☆	0.6 gm/kg
Burn Time	8–12 hours
Log Size (max)	45 cm
Weight	222 kg

The Alderlea cast iron over steel inbuilt allows you to transform your fireplace into an efficient heating system with traditional cast iron styling. Like all Pacific Energy inbuilts, it's easy to light, easy to use, and provides a clear view of the flame. With a variable speed fan, clean-glass airwash technology and heavy-gauge overbuilt construction, the T5 inbuilt will provide many years of comfort and enjoyment.

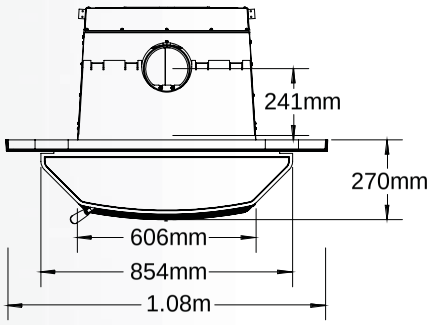

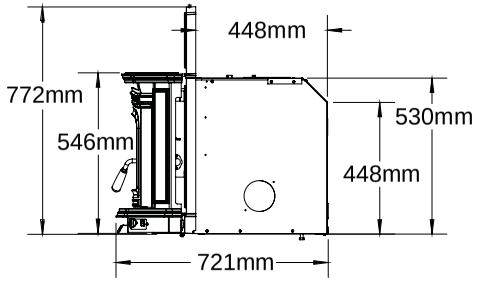

PACIFIC ENERGY

NEO INBUILT WOOD

NEO 1.6 – NEO 2.5

FEATURES

Reliable non-catalytic technology
Multi-port Combustion Air; creates unique enhanced flame
Airwash Technology; for clear, clean glass
Single-Lever Air Control; one touch control
Floating firebox; for extended life
304 Stainless Steel baffle; 10 year warranty
Extended Burn Technology (EBT)
2 x Fans with automatic control
East West Loading

OPTIONS

Stainless Steel Trim
Zero Clearance Kit

Contemporary
Metallic Black

Contemporary
Stainless Steel

NEO INBUILT 1.6

Heat Output	**200–230 m²**
Efficiency ★★★★☆☆	67%
Emissions ★★★★★☆	1.1 gm/kg
Burn Time	7–12 hours
Log Size (max)	40– 45 cm
Weight	129kg

ZERO CLEARANCE AVAILABLE

Make your smaller existing masonry fireplace a significant source of wood heat with the contemporary style of the Neo 1.6 wood burning inbuilt. Constructed with heavy- gauge steel, this inbuilt features Pacific Energy's industry-leading secondary combustion system, unique high capacity stainless steel baffle and advanced heat exchanger technology for exceptional clean-burning, efficient performance.

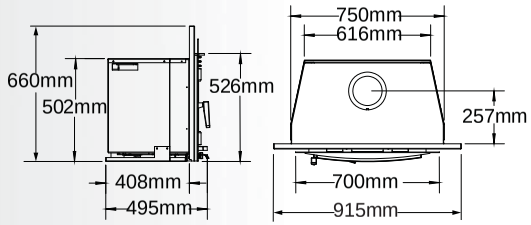

Contemporary
Metallic Black

Contemporary
Stainless Steel

NEO INBUILT 2.5

Heat Output	**280–300 m²**
Efficiency ★★★★★★	72%
Emissions ★★★★★☆	1.0 gm/kg
Burn Time	9–13 hours
Log Size (max)	45 cm
Weight	175 kg

ZERO CLEARANCE AVAILABLE

Transform an energy-wasting fireplace into a cost-saving source of heat without sacrificing the comfort and appeal of a wood fire. The Neo 2.5 inbuilt accommodates larger existing masonry fireplace and features Pacific Energy's trusted industry leading construction, boost air for easy lighting and one-lever air control for simple operation and burning efficiency. With all the features of the Neo 1.6 in a larger, higher-output format, the Neo 2.5 inbuilt delivers exceptional performance and durability.

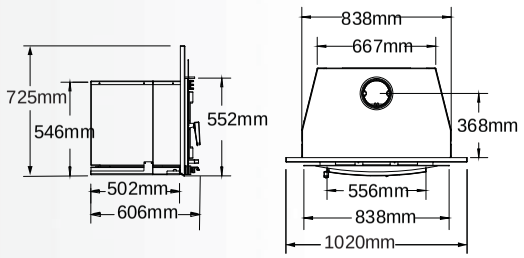

PACIFIC ENERGY

ALBERNI WOOD

ALBERNI 2.5

FEATURES

Reliable non-catalytic technology
Multi-port Combustion Air; creates unique enhanced flame
Airwash Technology; for clear, clean glass
Single-Lever Air Control; one touch control
Ash system; for easy cleaning
Floating firebox; for extended life
Heavy plate steel top; Removable Cast Iron Trivet for cooking
304 Stainless Steel baffle; 10 year warranty
Extended Burn Technology (EBT)
Leveling Legs
East West Loading

HIGH EFFICIENCY

ALBERNI 2.5

Heat Output	**280–300 m²**
Efficiency ★★★★★★	82%
Emissions ★★★★★★	1.0 gm/kg
Burn Time	7–12 hours
Log Size (max)	45 cm
Weight	154 kg

The Pacific Energy Alberni is designed for excellent performance with terrific style. The class of a charcoal finish door and top gives the Alberni a distinctive quality finish, where the added vitreous enameled black sides enhance the style and appeal the Alberni is created for.

Enhanced features include EBT2 technology regulating your heaters performance on extreme windy days, Pacific Energy's enhanced baffle giving a secondary ignition to your fire, and an air slide with over 150mm in adjustment. The Alberni is there at your demand to provide amazing clean burn, with the ability to close it right down so in the morning you have your heater still burning and heating your home.

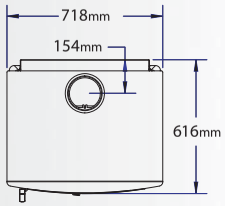

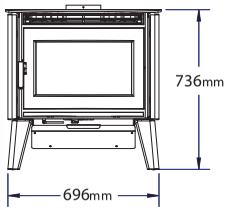

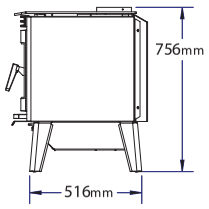

INBUILT WOOD

WOOD INBUILT APPLIANCE MINIMUM FIREPLACE OPENING

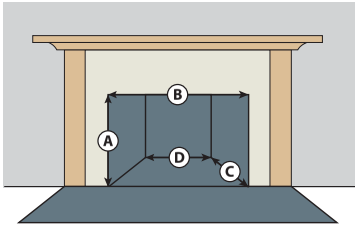

	A	B	C	D
Neo 1.6 Inbuilt	510	765	420	630
Neo 2.5 Inbuilt	560	870	510	680
Alderlea Inbuilt	533	622	464	607

WOOD APPLIANCE HEARTH REQUIREMENTS

	Extending in front of door opening	From side of door opening	Thickness
Neo 1.6 Inbuilt	500	50	50
Neo 2.5 Inbuilt	500	50	50
Alderlea Inbuilt	400	200	50

WOOD INBUILT APPLIANCE CLEARANCES TO COMBUSTIBLES

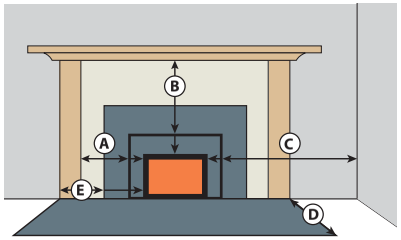

	A	B	C	D	E
Neo 1.6 Inbuilt	250	390	380	500	250
Neo 2.5 Inbuilt	150	390	380	500	150
Alderlea Inbuilt	300	600	300	400	200

ZERO CLEARANCE INSTALLATION

FOR NEO 1.6 AND 2.5
NOT AVAILABLE FOR T5

FRAMING GUIDE

Cavity Height 1,030 mm
Cavity Width 1,120 mm
Cavity Depth 625 mm

If raising of the floor, recommended height off the floor: 300 mm

FLOOR PROTECTION

18 mm thick fireproof board
– needs to extend under the Zero Clearance Box
– Hearth to extend 500 mm infront of the heater

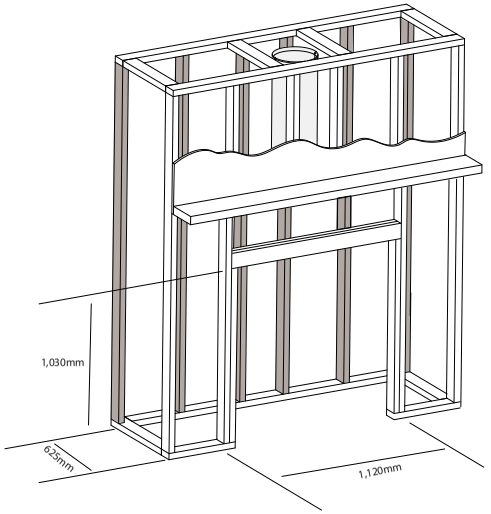

For reference only. Installations should be based on manuals and rating labels. Specifications subject to change.

WOOD APPLIANCE MINIMUM CLEARANCES TO COMBUSTIBLES

	STRAIGHT				CORNER	
	A	B	C	D	E	F
Vista	250	350	395	660	200	490
Super	100	375	360	680	200	550
Summit	175	250	395	575	150	515
Alderlea T4	250	350	395	680	200	500
Alderlea T5	100	375	360	695	200	560
Alderlea T6	175	250	395	625	150	515
Neo 1.6	120	250	275	595	150	455
Neo 2.5	100	300	250	670	80	370
Alberni 2.5	150	400	300	760	100	390

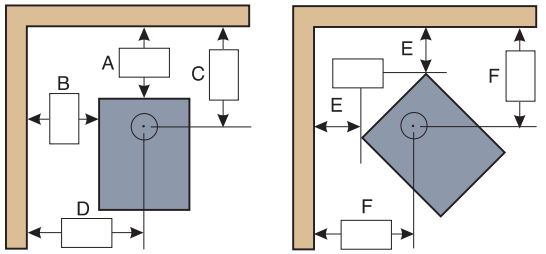

WOOD APPLIANCE HEARTH REQUIREMENTS

	Minimum Floor Protector (width x length mm)	Extending in front of door opening (mm)	From side of door opening (mm)	Floor Protection size from back wall	Thickness (mm)
Vista	781 x 723	300	200	781 x 975	6
Super	826 x 923	300	200	826 x 1025	6
Summit	875 x 1124	500	200	875 x 1300	6
Alderlea T4	781 x 723	300	200	781 x 975	6
Alderlea T5	826 x 923	300	200	826 x 1025	6
Alderlea T6	875 x 1124	500	200	875 x 1300	6
Neo 1.6	835 x 880	300	200	835 x 900	9
Neo 2.5	870 x 1000	300	200	870 x 1000	9
Alberni 2.5	870 x 1100	450	200	870 x 1200	9

	Heats				Performance		Features			Clearances (mm)		
	180-200 m^2	200–230 m^2	280–300 m^2	Over-night Burn	Efficiency	Emissions in gms	Zero Clearance	Chimney	Fan	Rear	Side	Corner
Vista	•				67%	1.5	-	-	Opt.	250	350	200
Super		•		•	67%	1.1	-	-	Opt.	100	375	200
Summit			•	•	64%	1.1	-	-	Opt.	175	250	150
Alderlea T4	•				67%	1.5	-	-	Opt.	250	350	200
Alderlea T5		•		•	67%	1.1	-	-	Opt.	100	375	200
Alderlea T6			•	•	64%	1.1	-	-	Opt.	175	250	150
Neo 1.6		•		•	75%	0.7	-	-	Opt.	120	250	150
Neo 2.5			•	•	82%	1.0	-	-	Opt.	100	300	80
Alberni 2.5			•	•	82%	1.0	-	-	Opt.	150	400	80
Alderlea T5 Inbuilt		•		•	67%	1.1	-	-	•	-	-	-
Neo 1.6 Inbuilt		•		•	67%	1.1	•	•	•	-	-	-
Neo 2.5 Inbuilt			•	•	72%	1.0	•	•	•	-	-	-

PACIFIC ENERGY

Canadian-made Woodstoves and Inbuilts proudly distributed by
Pivot Stove & Heating Australia in conjuction with Pacific Energy Fireplace Products

For more information and current product updates, visit pivotstove.com.au

* all products subject to change without warning Due to the limitations of the printing process, it is not possible to replicate colours exactly in a print format. Please check with your local Pacific Energy retailer for colour samples.