IMPORTANT:
KEEP THESE INSTRUCTIONS
FOR FUTURE REFERENCE.

PACIFIC ENERGY

ALBERNI 2.5

INSTALLATION AND OPERATING INSTRUCTIONS - AUSTRALIA

AUSTRALIA

SERIAL #

SAFETY NOTICE

If this stove is not properly installed, a house fire may result. For your safety, follow the installation instructions. Contact local building or fire officials about restrictions and installation inspection requirements in your area.

MODEL: Alberni 2.5

Contents

Contents 2
Safety and Maintenance 3
Maintenance Checks 4
Creosote 5
- Formation and Need for Removal 5
- Chimney Fires 5
- Avoiding a Chimney Fire 5
- If You Suspect a Chimney Fire 6
- In Case of a Chimney Fire 6

Appliance Dimensions 6
Assembly 6
Installation – Residential 7
- Clearances – Residential 8
- Minimum Clearances to Combustibles – Residential 8

Floor Protector 8
- Chimney and Connector – Residential 9
- Installation Procedure – Residential 9

Firebrick Installation 10
Combustion Air 11
Operation 12
- Wood Selection 12
- How to Test Your Wood 13
- Lighting for the First Time 13
- Lighting a Fire 13
- Normal Operation 13
- Restarting After Extended or Overnight Burns 14
- Proper Draft 14
- Ash Removal 14
- Disposal of Ashes 15

Baffle Removal 15
- Removal 15

Troubleshooting 16
Replacement Parts 17
Compliance Plate 19

NOTE:
WE STRONGLY RECOMMEND THAT SMOKE DETECTORS BE INSTALLED.

If smoke detectors have been previously installed, you may notice that they are operating more frequently. This may be due to curing of stove paint or fumes caused by accidentally leaving the fire door open. Do not disconnect the detectors. If necessary, relocate them to reduce their sensitivity.

SAFETY NOTICE:
If this stove is not properly installed, a house fire may result. For your safety, follow the installation instructions. Contact local building or fire officials about restrictions and installation inspection requirements in your area.

Please read this entire manual before you install and use your new room heater. Failure to follow instructions may result in property damage, bodily injury, or even death.

Safety and Maintenance

1. Burn cord wood only, dry well seasoned wood. The denser or heavier the wood when dry, the greater its heat value. This is why hardwoods are generally preferred. Green or wet wood should not be used, as it will reduce heat output, as well as contributing significantly to creosote buildup.

2. Remove ashes frequently and only when the stove is cold. Too much ash could cause embers to roll out the door when it is opened. This may pose a fire hazard. For proper operation, maintain a 25 mm minimum ash base.

3. If glass becomes darkened from slow burning or poor wood, it can readily be cleaned with fireplace glass cleaner when stove is cold. Never scrape with an object or use abrasive cleaners that might scratch the glass. The type and amount of deposit on the glass is a good indication of the flue pipe and chimney buildup. A light brown dusty deposit that is easily wiped off usually indicates good combustion and dry, well-seasoned wood, therefore relatively clean pipes and chimney. On the other hand, a black greasy deposit that is difficult to remove is a result of wet and green wood and too slow a burning rate. This will also create heavy deposit buildup in the chimney.

4. DOOR GASKETS - The gasket used by Pacific Energy (22 mm medium density fiberglass rope) requires only light pressure to seal. This will prolong seal life. It is important that the door seal be maintained in good condition. Periodically inspect seals and replace if necessary. Follow instructions included in the door gasket kit obtainable from your nearest Pacific Energy dealer.

5. DOOR GLASS - Do not slam loading door or otherwise impact glass. When closing door, make sure that no logs protrude to impact the glass. If the glass gets cracked or broken, **it must be replaced before using the stove.** Replacement glass can be obtained from your dealer. Use ceramic glass only. **Do not substitute with any other type.**

   GLASS SIZE – 457mm x 260mm x 5mm thick.

To remove broken glass, undo the four retaining screws and remove clamps, noting position for re-assembly. Remove all particles of glass. Be careful as they are very sharp. Install new glass complete with gasket. Replace clamps and screws.

6. Do not store wood within heater installation clearances, or within the space required for fuel loading and ash removal. Keep the area around the heater clean and free of loose combustibles, furniture, newspapers, etc.

7. If the heater requires cleaning, use mild soap and water only. **Use of abrasive cleaners will void warranty.**

8. Establish a routine for fuelling and firing the heater. Check daily for creosote buildup until experience shows how often you need to clean the chimney to be safe.

9. Be aware that the hotter the fire, the less creosote is deposited. Weekly cleaning may be necessary in mild weather, even though monthly cleaning is usually enough in the coldest months when burning rates are higher.

10. Instruct all members of your family on the safe operation of the heater. Ensure they have enough knowledge of the entire system if they are expected to operate it. Study the section on chimney fires and the importance of following the steps outlined "In Case of Chimney Fire".

WARNING:
Never use chemicals or any other volatile liquid to start a fire. Do not burn garbage, or flammable fluids such as gasoline, naptha, or engine oil. We strongly recommend that smoke detectors be installed.

WARNING:
Only use materials supplied by manufacturer when doing maintenence or replacements.

CAUTION:
- **Tighten screws very carefully, do not over-tighten**
- **Do not clean glass when hot**
- **Do not use abrasive cleaners on glass**

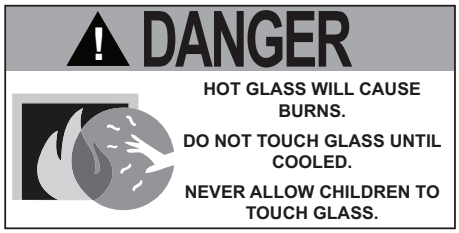

Maintenance Checks

Check the following parts for damage such as cracks, excessive corrosion, burned out sections and excessive warping**: (See website for descriptions and more detail)

Weekly:

- Firebrick - Visual, for cracking.
- Door Gasket - sagging, placement, damage.

Monthly

- Brick rail tabs and brick rails.
- Air riser tube in the back of the firebox.
- Back side of airwash chamber.
- Baffle locking pin.
- Boost tube cover.

When Cleaning the Chimney System:

- Top baffle board/blanket.
- Baffle.
- Top heat shield and mounting bolt.
- Baffle Gasket.
- Brick Rails.
- Manifold.

**- Some warping of the baffle is normal (up to .65 cm).
- Replace if the baffle has permanent warping greater than this or has cracking or breakage.
- Please contact your Dealer if you experience any of the damage listed above. Continuing to operate your stove with broken parts may accelerate damage to other parts and may void your warranty

Creosote

Formation and Need for Removal

When wood is burned slowly, it produces tar and other organic vapours, which combine with expelled moisture to form creosote. The creosote vapours condense in the relatively cool chimney flue of a slow burning fire. As a result, creosote residue accumulates on the flue lining. When ignited, this creosote makes an extremely hot fire.

The chimney connector and chimney should be inspected periodically (at least once every two months) during the heating season to determine if a creosote buildup has occurred. If creosote has accumulated (3 mm. or more), it should be removed to reduce the risk of a chimney fire.

1. Highest smoke densities occur when a large amount of wood is added to a bed of hot coals and the air inlet is closed. The heated wood generates smoke, but without ample air, the smoke cannot burn. Smoke-free, clean burning requires leaving the air inlet relatively wide open, especially during the first 10 to 30 minutes after each loading, when most of the smoke generating reactions are occurring. After 30 minutes or once the wood is fully charred, the air inlet can be turned down substantially without excessive smoke generation. Wood coals create very little creosote-producing smoke.

2. The cooler the surface over which the wood smoke is passing, the more creosote will be condensed. Wet or green wood contributes significantly to creosote formation as the excess moisture that is boiled off cools the fire, making it difficult for the tars and gases to ignite, thus creating dense smoke and poor combustion. This moisture-laden smoke cools the chimney, compounding the problem by offering the smoke the ideal place to condense.

   In summary, a certain amount of creosote is inevitable and must be lived with. Regular inspection and cleaning is the solution. The use of dry, seasoned wood and ample combustion air will help to minimize the buildup.

Chimney Fires

Excessive creosote build-up can cause a chimney fire. Creosote comes from tar and organic vapours released from a slow burning wood fire. Flammable creosote will condense and accumulate in the lining of a relatively cool chimney. When ignited, this creosote can result in an extremely hot fire.

Avoiding a Chimney Fire

There are two ways to avoid chimney fires:

1. Keep your chimney clear of creosote build-up by cleaning your chimney before each burn season, and as necessary (accumulations of 3 mm or more) during the season.

2. Burn clean, well-seasoned wood only (seasoned at least one year). Avoid wet or green wood.

3. Do not burn household trash, cardboard, plastics, construction lumber, treated or beach wood (as these will corrode your fireplace and void your warranty).

4. Do not leave the air inlet wide-open for extended periods of time.

5. Keep a fire extinguisher handy.

6. Prepare a home evacuation plan with a place outside where everyone is to meet.

If You Suspect a Chimney Fire

Signs of a chimney fire may be one or more of the following:

1. A roaring sound.
2. Vibration of the chimney.
3. Flames and sparks shooting out of the top of the chimney.

In Case of a Chimney Fire

1. Immediately close the air inlets on the stove.
2. Evacuate the home, and call the local fire department.
3. After the chimney fire has been extinguished, the chimney must be cleaned and checked for stress and cracking before starting another fire. Also check combustibles around the chimney and roof.

Appliance Dimensions

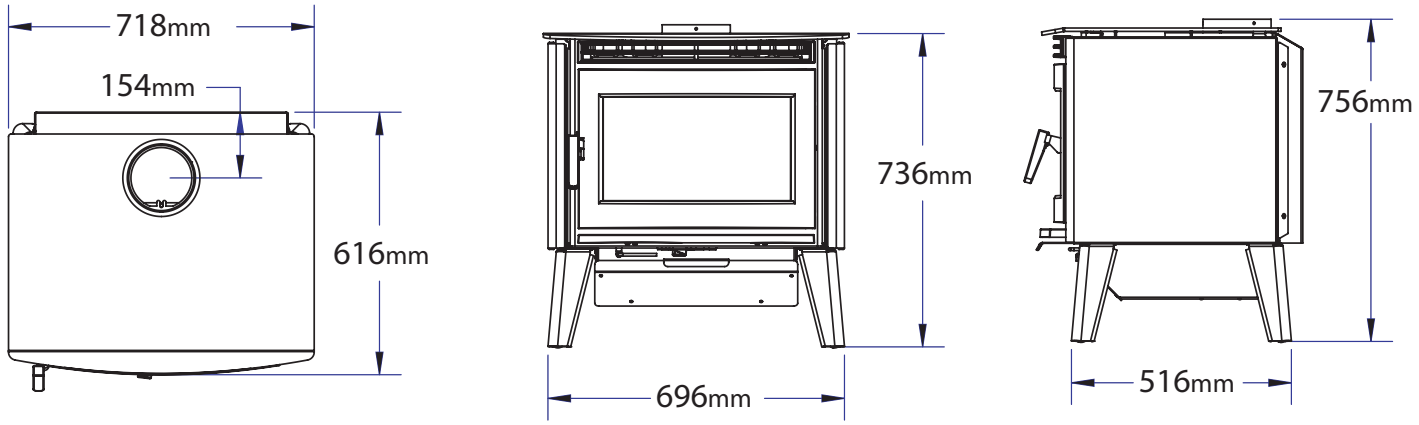

Figure 1. AB25 Dims metric.

Assembly

Crate Removal

1. Carefully remove wood top and supports.
2. Remove plastic cover.
3. Using a 12mm wrench, remove lag bolts that secure hold down brackets to bottom pallet.
4. Slide the hold down brackets away from the stove.

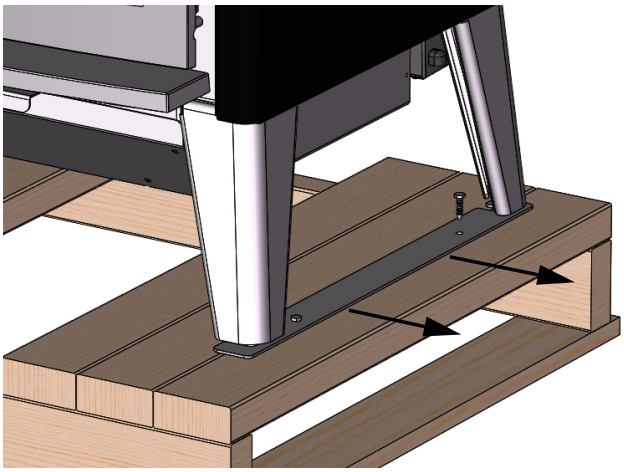

Figure 2. AB25 Hold down removal1.

Side Panel Removal/Installation

1. To remove the panels, first remove the screws that secure the panel to the rear shield. Fig. #3
2. Disengage the the tabs in the front of the panel by sliding the panel forward away from the unit Fig. #4.
3. To install the panels, engage the tabs on the panel front flange into the slots in the panel mounting bracket. Fig. #4
4. Attach the panel to the rear shield. Secure with two screws. Fig. #3

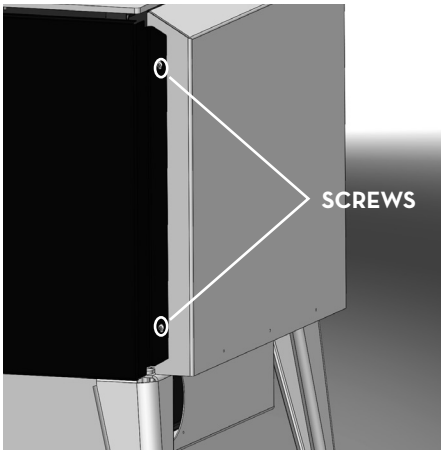

Figure 3. AB25.Side panel screws.

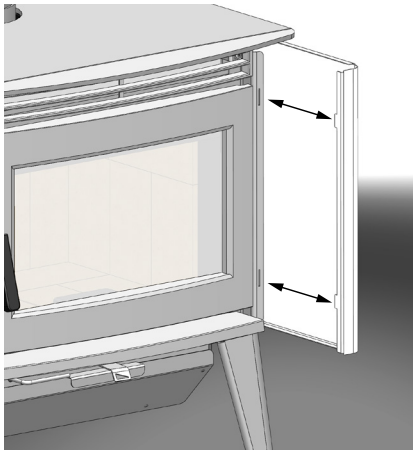

Figure 4. AB25.Side panel tab install.

Installation

Warning:
Under no circumstances is this heater to be installed in a makeshift or "temporary" manner. It may be fired only after the stove is installed properly.

DO NOT ATTEMPT TO CONNECT THIS HEATER TO ANY AIR DISTRIBUTION DUCT.

Outside combustion air or fresh air into the room may be required in your area, consult local building codes (see Combustion Air section).

WARNING: THE APPLIANCE AND FLUE-SYSTEM SHALL BE INSTALLED IN ACCORDANCE WITH AS/NZS 2918 AND THE APPROPRIATE REQUIRMENTS OF THE RLEVANT BUILDING CODE OR CODES

WARNING: APPLIANCES INSTALLED IN ACCORDANCE WITH THIS STANDARD SHALL COMPLY WITH THE REQUIREMENTS OF AS/NZS 4013 WHERE REQUIRED BY THE REGULATORY AUTHORITY, I.E. THE APPLIANCE SHALL BE IDENTIFIABLE BY A COMPLIANCE PLATE WITH THE MARKING 'TESTED TO AS/NZS 4013'.

ANY MODIFICATION OF THE APPLIANCE THAT HAS NOT BEEN APPROVED IN WRITING BY THE TESTING AUTHORITY IS CONSIDERED TO BE IN BREACH OF THE APPROVAL GRANTED FOR COMPLIANCE WITH AS/NZS 4013.

CAUTION: MIXING OF APPLIANCE OR LFUE-SYSTEM COMPONENTS FROM DIFFERENT SOURCES OR MODIFYING THE DIMENSIONAL SPECIFICATION OF COMPONENTS MAY RESULT IN HAZARDOUS CONDITIONS. WHERE SUCH ACTION IS CONSIDERED, THE MANUFACTURER SHOULD BE CONSULTED IN THE FIRST INSTANCE.

CAUTION: CRACKED OR BROKEN COMPONENTS, e.g. GLASS PANELS OR CERAMIC TILES, MAY RENDER THE INSTALLATION UNSAFE.

WARNING: ANY MODIFICATION OF THE APPLIANCE THAT HAS NOT BEEN APPROVED IN WRITING BY THE TESTING AUTHORITY IS CONSUDERED AS BREACHING AS/NZS 4013.

CAUTION: THIS APPLIANCE SHOULD NOT BE OPERATED WITH A CRACKED GLASS.

CAUTION: THIS APPLIANCE SHOULD BE MAINTAINED AND OPERATED AT ALL TIMES IN ACCORDANCE WITH THESE INSTRUCTIONS.

CAUTION: THE USE OF SOME TYPES OF PRESEVATIVE-TREATED WOOD AS A FUEL CAN BE HAZARDOUS.

Clearances - Residential

MinimumClearance to Combustibles

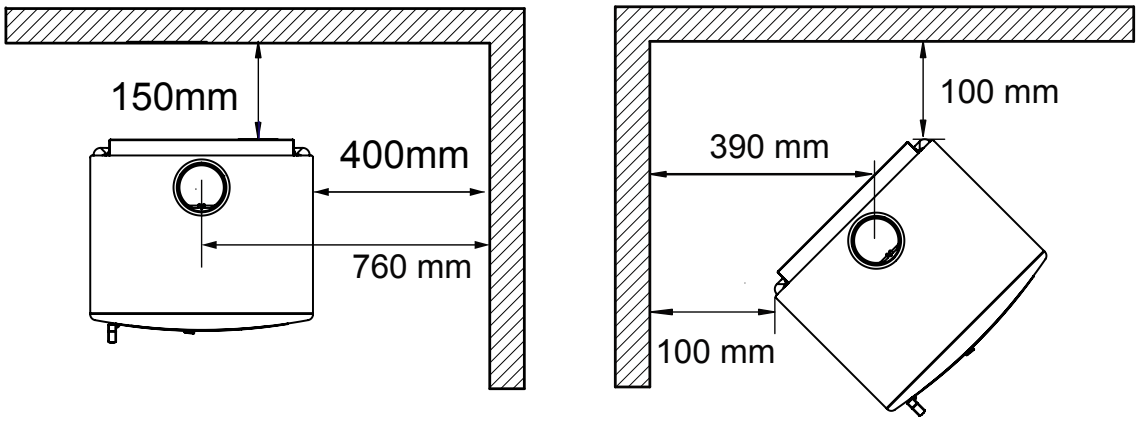

Figure 5. AB25 AUS CLEARANCES.

Floor Protector

The stove may be installed on a combustible floor provided ember protection made from a 9mm thick non-combustible material (Bellis Board) with a thermal conductivity value of .1w/m degree K.

This protection must extend as follows:

450 mm on the firing side and 200mm both sides of the door opening. See Figure #6 at right.

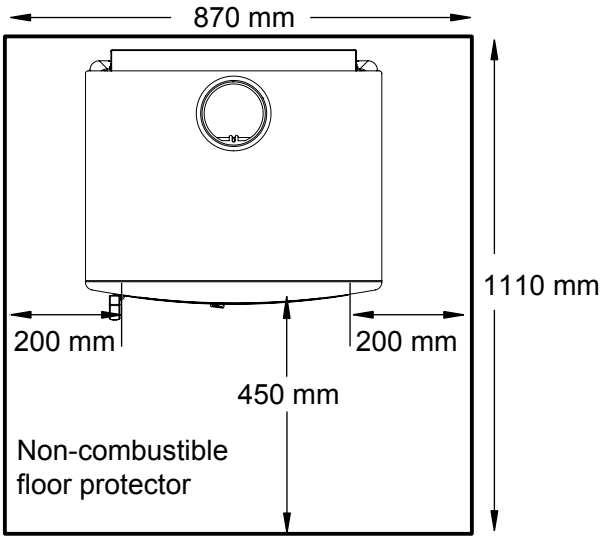

Figure 6. AB25 AUS Floor protection.

Minimum Width - 870 mm

Minimum Overall Depth - 1110mm

Chimney and Connector

WARNING: INSTALL CHIMNEY AND ALL COMPONENTS OF CHIMNEY SYSTEM ACCORDING TO CHIMNEY MANUFACTURER'S INSTRUCTIONS.

Connect to a listed chimney complying with the requirements of AS/NZS2918/2001 and a chimney suitable for use with solid fuel that is lined and in good condition and meets local building codes. The chimney flue size should be the same as the stove outlet for optimal performance. Reducing or increasing the flue size may adversely affect stove performance. Chimney flue exit is to be minimum 100 cm above roof and 60 cm above highest projection within 300 cm. The installation must meet all local codes. Do not connect this unit to a chimney flue serving another appliance. Minimum system height is 460 cm (measured from base of appliance).

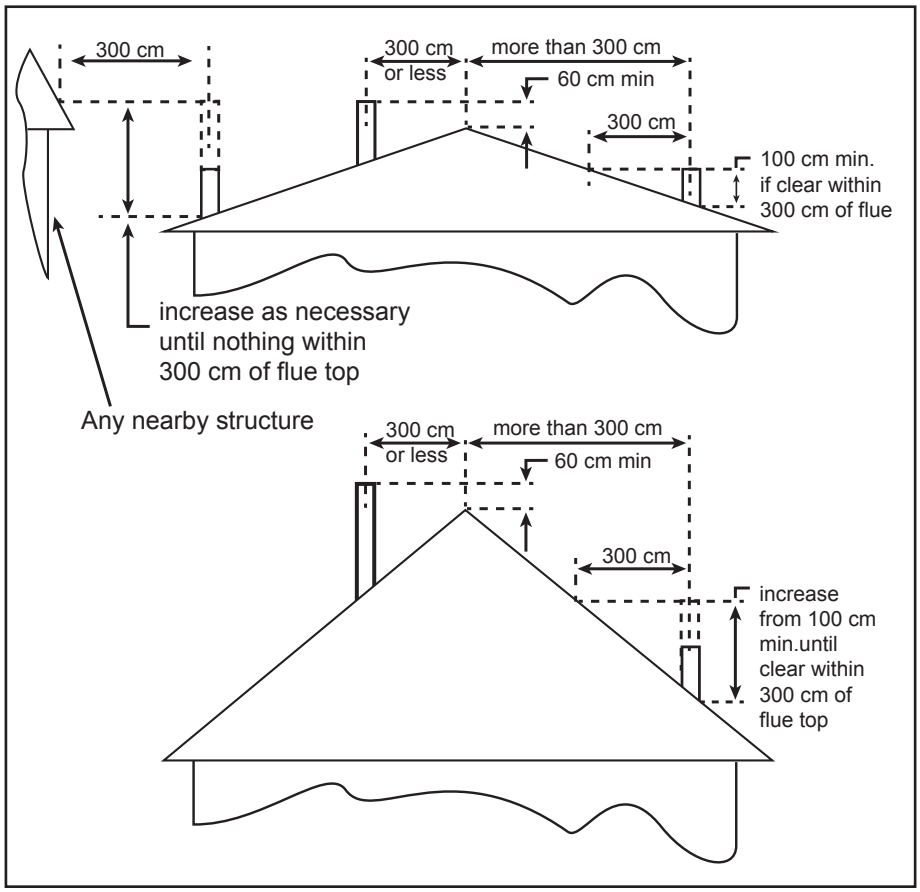

Figure 7. Neo 1.6 Chimney and connector

Installation Procedure -Residential

1. Install all components to the chimney manufacturer's installation requirements. (Outside combustion air may be required, consult local building codes. See Combustion Air section on page 11.)

2. Installed with the crimped or male ends pointing down. This will carry any liquid creosote or condensation back into the stove.

3. If a roof or ceiling support is used in the installation, you will find the chimney manufacturer's complete instructions packed with the roof support.

4. To start installing smoke pipe (chimney connector), slip crimped edge of the pipe inside the stove collar. Use holes provided in collar to secure pipe with three screws.

5. Install the remaining lengths of pipe, one on top of the other, to the finished height of the chimney connector and secure to each other.

Firebrick Installation

This package contains 18 full-size firebricks, as well as 6 various cut-size bricks.

With the heater in the upright position, install firebricks as follows:

- Install the rear firebricks, 4 full-size, two on each side of the baffle tube.
- Then place 1 brick "B" in between the full bricks on the left as shown below.
- Next, install 4 full-size firebricks and brick "C" as shown on each side of the firebox.
- Lastly, place 5 full-size firebricks and 1 of each bricks B, C and 2 of D on the bottom of the heater in the pattern shown below.

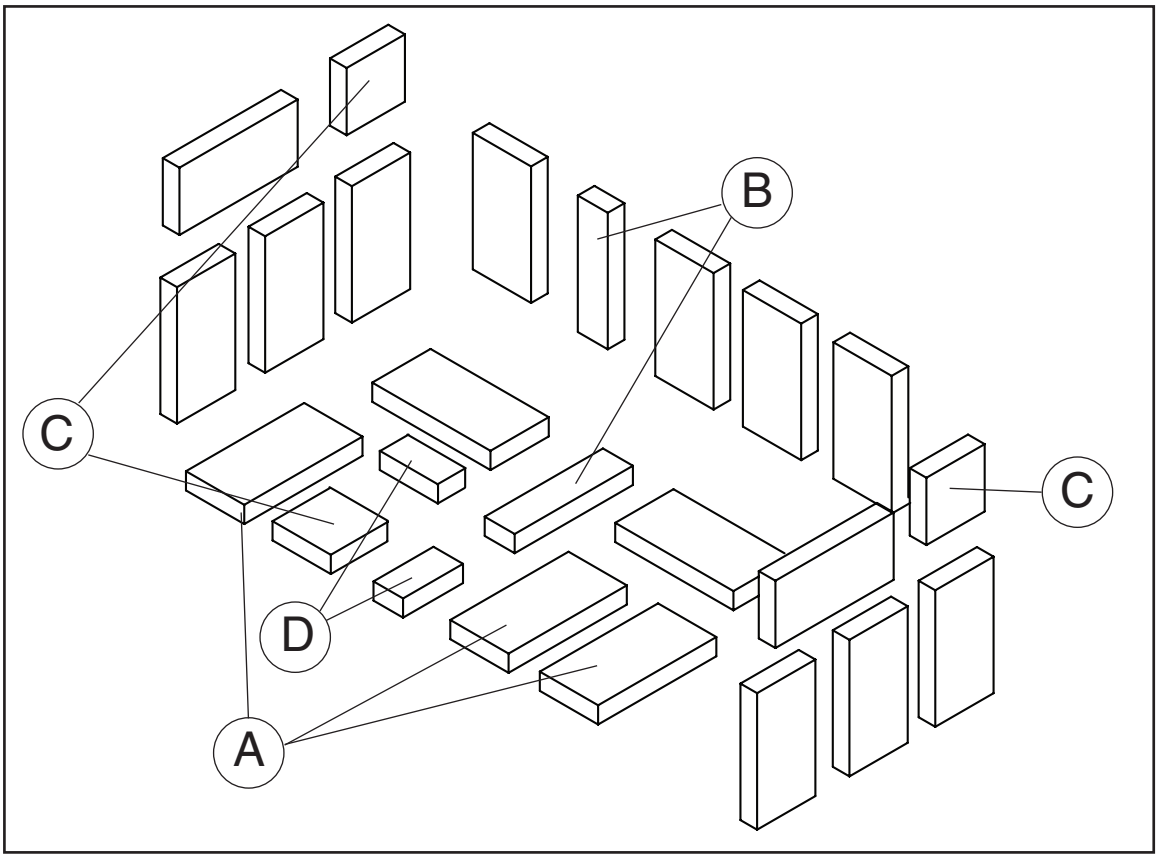

Figure 8. Neo 2.5 Brick layout

ITEM	DIMENSIONS	PART NUMBER
A	230 mm x 115 mm x 32 mm	5096.99
B	57 mm x 230 mm x 32 mm	7847.3
C	115 mm x 115 mm x 32 mm	7847
D	57mm x 115 mm x 32 mm	7847.1

Combustion Air

Intake or combustion air can be supplied to the stove in one of two ways. Consult your local building codes before proceeding.

1. **Outside air supply** - (Necessary for mobile home installation, optional for residential installation.) To draw outside air through the floor, cut or drill a 102 mm diameter hole directly below the bottom hole of the ash box enclosure. Connect enclosure to the floor with a short 102 mm diameter pipe.

   This hole must get its air from a **ventilated** crawl space or be extended with duct to the outdoors (see Figure #8, Page 11). The use of outside combustion air for residential installation requires the unit to be secured to the structure to prevent dislodging of the air duct.

Note: When installed in a mobile home, this unit is not designed to be operated with the firing door open. In addition to the obvious hazard of sparks landing on combustibles, an open fire door will cause the heater to draw air from the living space and possibly cause suffocation.

2. **Room air supply** -There is a 102 mm opening in the ash box enclosure. The stove will draw its air from the room through this opening and into the firebox intake.

Note: The living space around the heater must be well ventilated with good air circulation. Anything that may cause a negative pressure can cause gases or fumes to be pulled into the living area. During extremely cold weather, and especially when burning at very slow rates, the upper parts of the exposed chimney may ice up, partially blocking the flue gases. If blockage occurs, flue gases may enter living space.

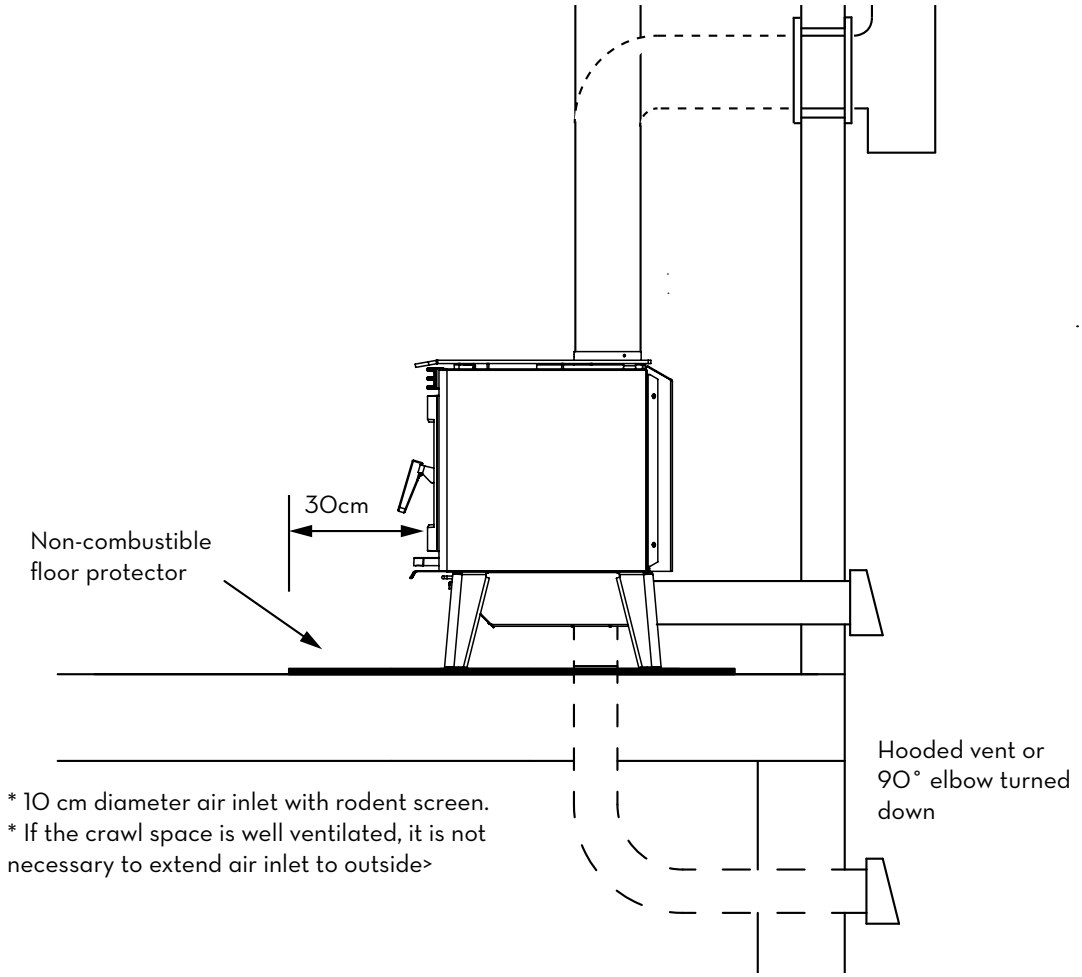

Figure 9. AB25 AUS INSTALL Diagram.

CAUTION:
Never use gasoline, gasoline type lantern fuel, kerosene, charcoal lighter fluid or similar liquids to start or "freshen up" a fire in this heater. Keep all such liquids well away from the heater while it is in use.

CAUTION:
Hot while in operation. Keep children, clothing and furniture away. Contact may cause skin burns.

WARNING: DO NOT USE FLAMMABLE LIQUIDS OR AEROSOLS TO START OR REKINDLE THE FIRE.

WARNING: DO NOT USE FLAMMABLE LIQUIDS OR AEROSOLS IN THE VICINITY OF THIS APPLIANCE WHEN IT IS OPERATING.

WARNING: DO NOT STORE FUEL WITHIN HEATER INSTALLATION CLEARANCES.

WARNING: DO NOT OPERATE THIS APPLIANCE AS AN OPEN FIRE.

WARNING: OPEN AIR CONTROL (AND DAMPER WHEN FITTED) BEFORE OPENING FIRING DOOR.

Your PACIFIC ENERGY heater is designed for maximum overall efficiency at a moderate firing rate. Overfiring is hazardous and a waste of fuel. Too slow a burn contributes to creosote buildup and lowers combustion efficiency.

NOTE: Left and Right as referred to in this manual are considered your left and right when facing the front of the woodstove.

Wood Selection

This heater is designed to burn natural wood only. Higher efficiency and lower emissions generally result when burning air-dried seasoned hardwoods, as compared to softwoods or too green or freshly cut hardwoods.

Wood should be properly air dried (seasoned) for six months or more. Wet or undried wood will cause the fire to smoulder and produce large amounts of creosote. Wet wood also produces very little heat and tends to go out often.

DO NOT BURN :

- Salt water wood *
- Treated wood
- Wet or green wood
- Coal/charcoal
- Garbage/Plastic *
- Solvents

* These materials contain chlorides which will rapidly destroy metal surfaces and void warranty.

Do not burn anything but wood. Other fuels (eg. charcoal) can produce large amounts of carbon monoxide, a tasteless, odourless gas that can kill. Under no circumstances should you attempt to barbecue in this heater.

How to Test Your Wood

Add a large piece of wood to the stove when it has a good large bed of coals. It is dry if it is burning on more than one side within one minute. It is damp if it turns black and lights within three minutes. If it sizzles, hisses and blackens without igniting in five minutes it is soaked and should not be burnt.

Lighting for the First Time

Curing of the Paint Finish

To achieve the best finish, the paint on your stove must be baked on. When burning your stove for the first 2-3 times it is very important that the room be well ventilated. Open all windows and doors. Smoke and fumes caused by the curing process may cause discomfort to some individuals.

Lighting a Fire

WARNING: Never use chemicals or any other volatile liquid to start a fire.

1. Adjust air control to maximum firing position (start position) and open door.
2. Place crumpled newspaper in the centre of the heater and criss-cross with several pieces of dry kindling. Add a few small pieces of dry wood on top.
3. Ignite the paper and close the door.
4. After the fire has established itself, open the door and add a few small logs. Close the door.
5. Begin normal operation after a good coal base exists and wood has charred.

Normal Operation

1. Set air control to a desired setting. If smoke pours down across the glass (waterfall effect) this indicates you have shut the control down too soon or you are using too low a setting. As every home's heating needs vary (based on insulation, windows, climate, etc.) the proper setting can only be found by trial and error and should be noted for future burns.
2. To refuel, adjust air control to high, and give the fire time to brighten. Open the door slowly, this will prevent backpuffing.
3. Use wood of different shape, diameter and length (up to 457mm). Load your wood and try to place the logs so that the air can flow between them. Always use dry wood.
4. Do not load fuel to a height or in such a manner that would be hazardous when opening the door.
5. For extended or overnight burns, unsplit logs are preferred. Remember to char the wood completely on maximum setting before adjusting air control for overnight burn.

WARNING: Always keep loading door closed when burning. This heater is not designed for open door burning.

WARNING: No alteration or modification of the combustion air control assembly is permitted. Any tampering will void warranty and could be very hazardous.

WARNING: Do not use grates or andirons to elevate the fuel. Burn directly on the fire bricks. Replace broken or missing bricks. Failure to do so may create a hazardous condition.

Restarting After Extended or Overnight Burns

DO NOT OVERFIRE THIS HEATER:
Attempts to achieve heat output rates that exceed heater design specifications can result in permanent damage to the heater and chimney.

1. Open door and rake hot embers towards the front of the heater. Add a couple of dry, split logs on top of embers, close door.
2. Adjust air control to high (left position) and in just a few minutes, logs should begin burning.
3. After wood has charred, reset air control to desired setting.
4. To achieve maximum firing rate, set control to high (left position). Do not use this setting other than for starting or preheating fresh fuel loads.

Proper Draft

1. Draft is the force which moves air from the appliance up through the chimney. The amount of draft in your chimney depends on the length of the chimney, local geography, nearby obstructions and other factors.
2. Too much draft may cause excessive temperatures in the appliance. An uncontrollable burn or a glowing red stove part or chimney indicates excessive draft.
3. Inadequate draft may cause backpuffing into the room and plugging of the chimney. Smoke leaking into the room through appliance and chimney connector joints indicates inadequate draft.

Ash Removal

Whenever ashes get 76 mm to 102 mm inches deep in your firebox, and when fire has burned down and cooled, remove excess ashes. Leave an ash bed approximately (25 mm) deep on the firebox bottom to help maintain a hot charcoal bed.

CAUTION:
Ashes are to be removed only when the heater is cold.

Ash Chute Operation: Your Alderlea stove is equipped with an ash chute system to ease removal of ash from the ash lip area. To use this system, first pull out the ash pan approximately 51 mm, sweep the ash into the chute located to the right side of the ash lip, and close the ash pan again.

Ash Cleanout System: The ash dump handle is located under the ash lip on the left hand side. To operate ash dump, pull handle out 13 mm and turn clockwise. This will unlock the ash dump and allow it to open. Hold handle open while pulling ashes into the opening. Avoid large embers as these still contain heat value. Release handle and push in to lock. Ensure ash dump door is properly engaged. Fill the cavity with the remaining ash level with the firebox floor. Pull out ashpan and discard ashes into metal container. Replace ashpan and ensure it is seated properly.

Do not burn with ash dump door open. Doing so will create a hazardous condition. Always leave about 25 mm of ash in firebox when cleaning.

Disposal of Ashes

Ashes should be placed in a metal container with a tight fitting lid. The closed container of ashes should be placed outside on a non-combustible floor or on the ground, well away from all combustible materials, pending final disposal. If the ashes are disposed of by burial in soil or otherwise locally dispersed, they should be retained in a closed container until all cinders have thoroughly cooled. Other waste should not be placed in this container.

Baffle Removal

Chimney connector pipe should be disconnected from stove to clean and inspect. Only if this is not possible should you remove baffle assembly. CAUTION: Ceramic blanket insulation is located on top of baffle. Do not use a vacuum in this area.

DO NOT OPERATE WITH BAFFLE ASSEMBLY OR INSULATION REMOVED.

Removal

Remove retaining pin located at the rear top of the firebox, just below the baffle. Lift baffle up and pull forward to disconnect from the supply tube. Tilt baffle sideways to drop down and remove from firebox. Inspect gasket between baffle and supply tube. If necessary, replace with gasket SSER.1395 available from your Pacific Energy dealer. Re-install baffle assembly in reverse order. The two side pieces of insulation must be tight against the siderails.

WARNING: Sweep/Clean chimney with baffle installed or be sure to plug the top of the baffle tube in the back of the firebox before sweeping or cleaning. Failure to prevent ash or soot from falling into the baffle tube will cause incorrect operation and will lead to premature burn out of the tube or baffle.

It is recommended to inspect the liner and connector monthly and to have the liner cleaned annually or more frequently if required.

Cover the opening at the top of the baffle supply tube when cleaning the chimney liner. If debris gets into the tube

Troubleshooting

Problem	Cause	Cure
Glass is Dirty	1. Wood is wet	• Use dry wood
	2. Turning down air control or damper too soon	• Do not turn down until a) there is a good bed of coals b) the wood is charred
	3. Draft too low	• Improper chimney height and / or diameter, -consult dealer • Chimney plugged or restricted, - inspect and clean • Provide outside air for combustion
	4. Door gasket leakage	• Replace gasket • Check latch for proper operation
Excessive Creosote Buildup	See 1,2,3, above.	See 1,2,3, above.
Low Heat Output	1. Wood is wet 2. Fire too small 3. Draft too low	• Use dry wood • Build a larger fire • Chimney plugged or restricted, - inspect and clean
Won't Burn Overnight	1. Air control is set too high 2. Not enough wood	• Set air control lower • Unsplit wood is preferred for overnight burns
	3. Draft too high	• Excessive chimney height and/or diameter
	4. Poor quality or wet wood	• Use good quality, dry wood
Wood Won't Burn	1. Combustion air supply blocked	• Check outside air supply for obstruction
	2. Draft too low	• Chimney plugged or restricted, -inspect and clean • Chimney oversized or otherwise unsuitable, -consult Dealer

Replacement Parts - Alberni 2.5

(WHEN ORDERING, INCLUDE PART NUMBER WITH DESCRIPTION)

ITEM	DESCRIPTION	PART NO.
2	Porcelain Black Panel Set	PERP.786801
3	Door Catch	NE16.7825
4	Ash Lip	NE25.5037901
5	Gasket Guides (4 pc.)	NE25.7840
6	Replacement Glass (c/w Tape)	NE25.5034900
7	Door Gasket Kit	WODC.NEODGKIT
8	Door Casting, Black	NE25.5037900
9	Door Handle Assembly (complete)	NERP.7817
9a	Wood Door Handle	NE16.7817
10	Side Shield Bracket,	PERP.786806
11	Firebrick Set	NE25.BRIC
12	Brick Rail, Left/Right	NE25.RAILSET
13	Replacement Baffle Kit	NE25.BAFKIT
14*	Baffle Pin	SSER.125001
15	Ash Dump Assembly	NE25.7857
16	Leg (x1 only)	PERP.7869
17	Leg Adapter	PERP.786807
18	Ash Drawer	PERP.786810
19	Air Shutter Assembly	NE16.7826
20	Secondary Air Control Assembly	PERP.7838
21	Upper Grill	NE25.5037902
22	Removable back brick rail	NE25.78325
23	Heat Shield	NERP.7867

* Items not shown.

Optional Blower ..... WODC.EUBLOWB

All parts may be ordered from your nearest Pacific Energy dealer. Use www.pacificenergy.net for the location of the dealer nearest you.

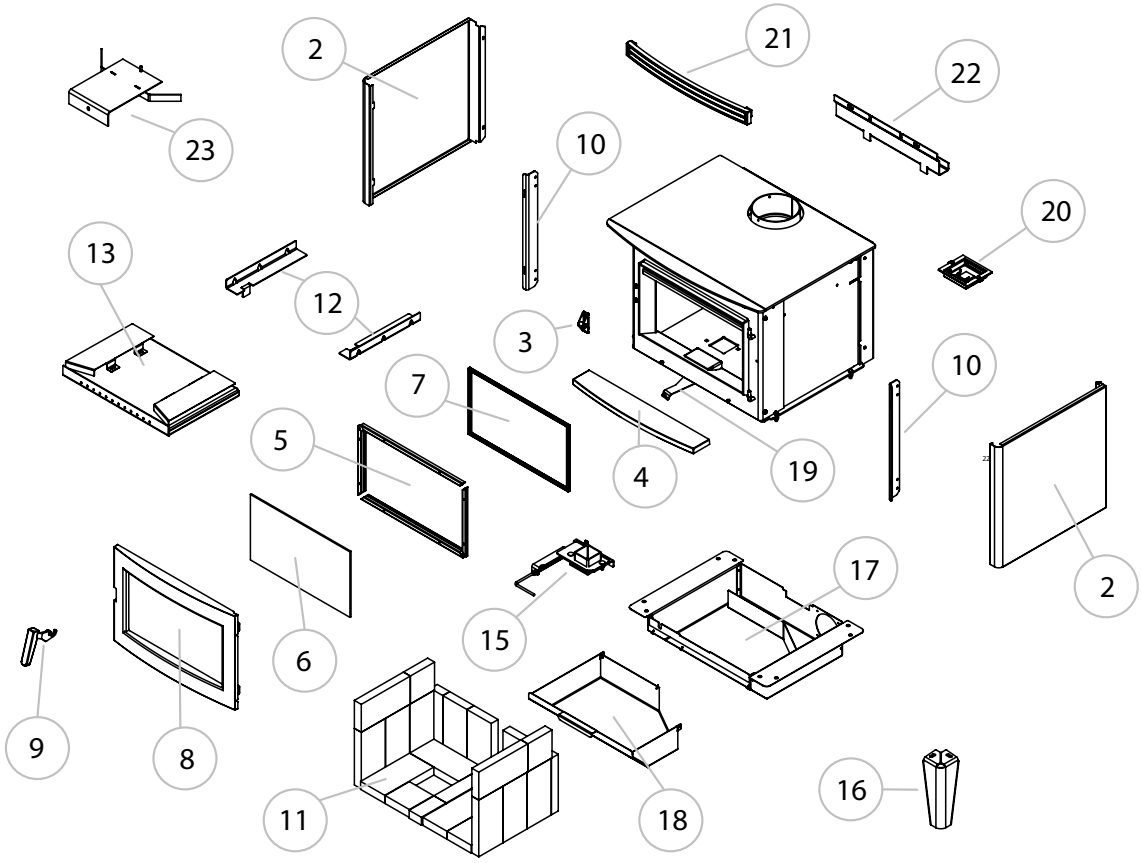

Figure 10. AB25.Exploded Parts.

Compliance Plate

PACIFIC ENERGY

PACIFIC ENERGY FIREPLACE PRODUCTS LTD.
2975 ALLENBY RD., DUNCAN, BC V9L 6V8

Model: **NEO 2.5, ALBERNI 2.5**
Series: **A** Type: **FREEESTANDING**

Tested by**: HRL TECHNOLOGY PTY LTD**
TRAMWAY ROAD, MORWELL, VICTORIA

Test report no: **HCMG/15/013 13/MARCH/2015**

WHEN TESTED IN ACCORDANCE WITH:
AS/NZS 4012:2014 & AS/NZS4013:2014

MAXIMUM AVERAGE HEAT OUTPUT BURNING HARDWOOD
9.9 kW

OVERALL AVERAGE EFFICIENCY BURNING HARDWOOD
82%

PARTICULATE EMISSIONS FACTOR - 1.0g/kg

CATALYTIC COMBUSTOR **- NO**

Distributed by: PIVOT STOVES AND HEATING CO
234-238 MOORABOOL STREET, GEELONG, VIC 3220
pivotstove.com.au

010217 **MADE IN CANADA** 5050.425AS

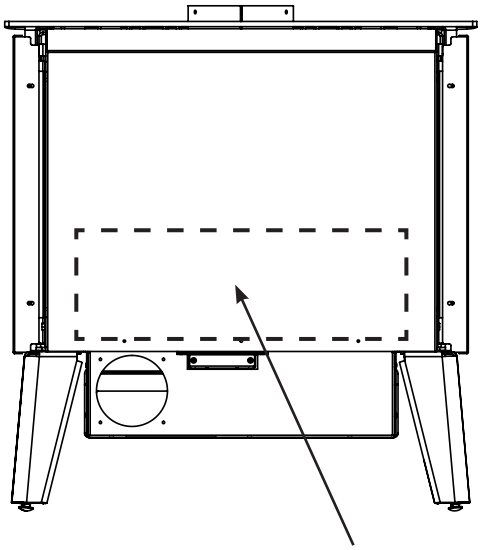

Compliance plate is located at the rear of the Alberni 2.5

© 2015 Copyright Pacific Energy Fireplace Products LTD

Reproduction, adaptation, or translation
without prior written permission is prohibited,
except as allowed under the copyright laws.

PACIFIC ENERGY FIREPLACE PRODUCTS LTD.

Web site: www.pacificenergy.net
2975 Allenby Rd., Duncan, BC V9L 6V8

PRINTED IN CANADA