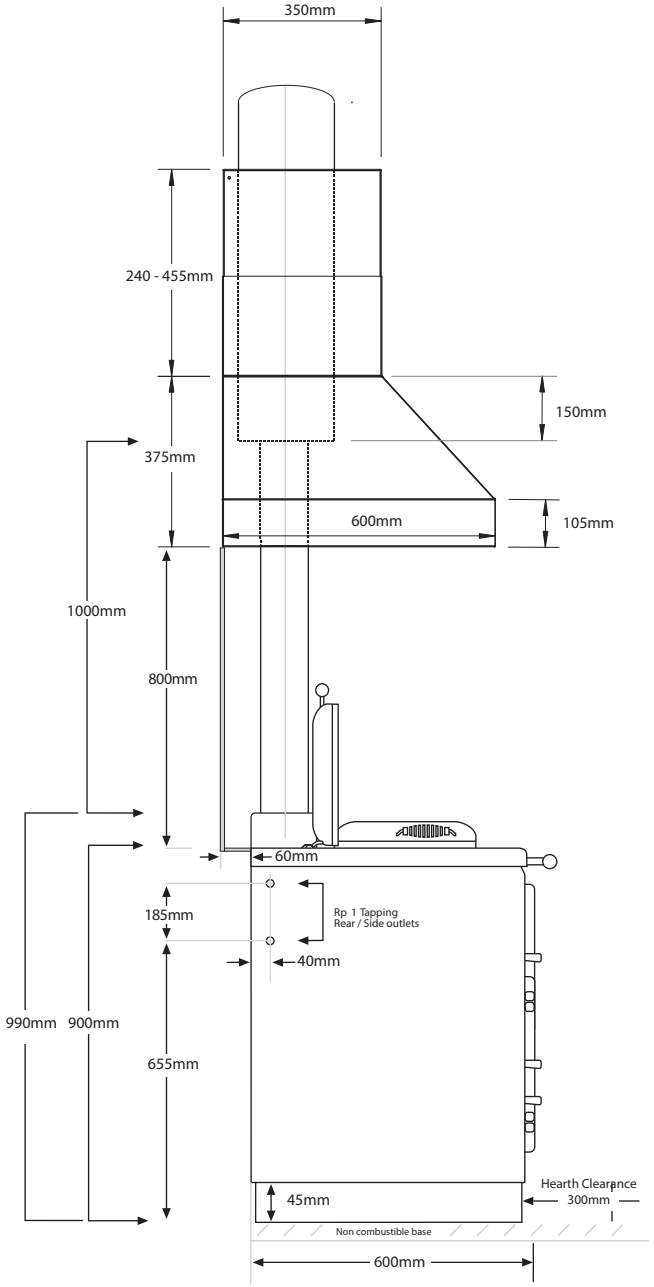

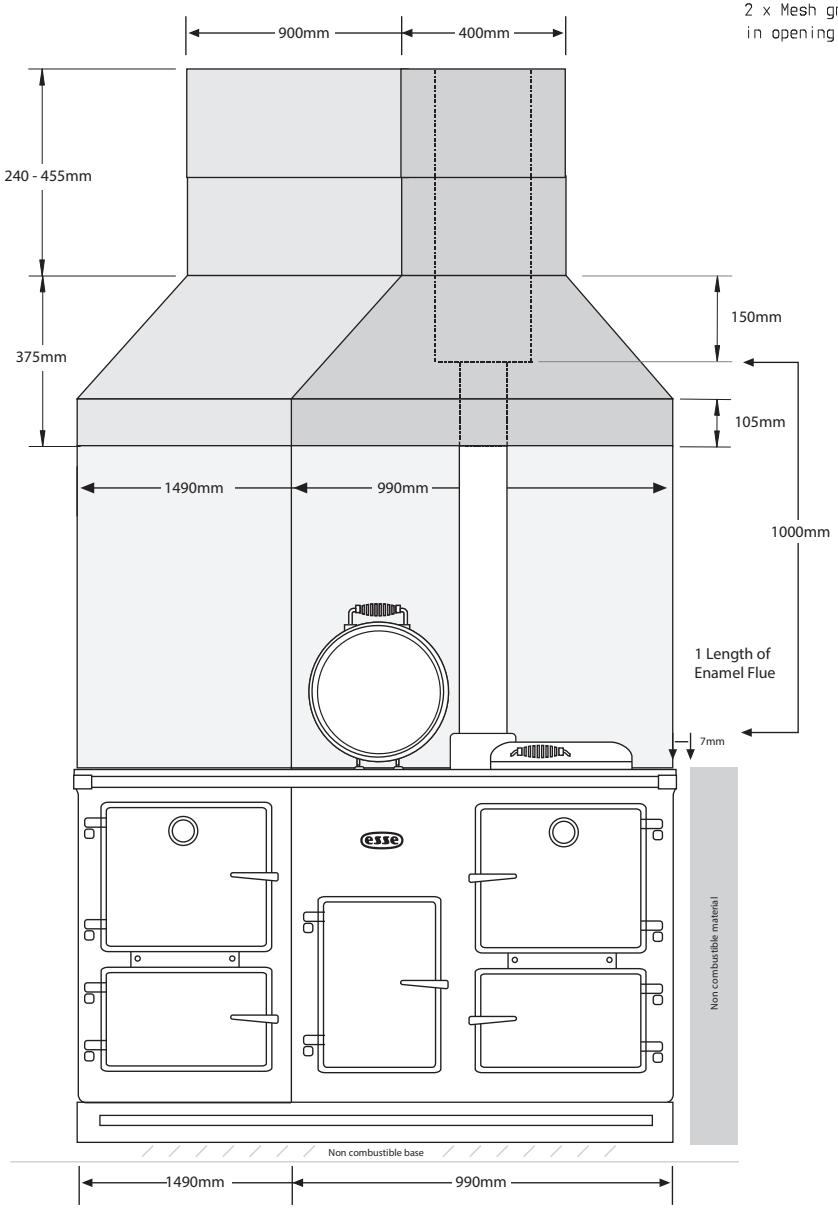

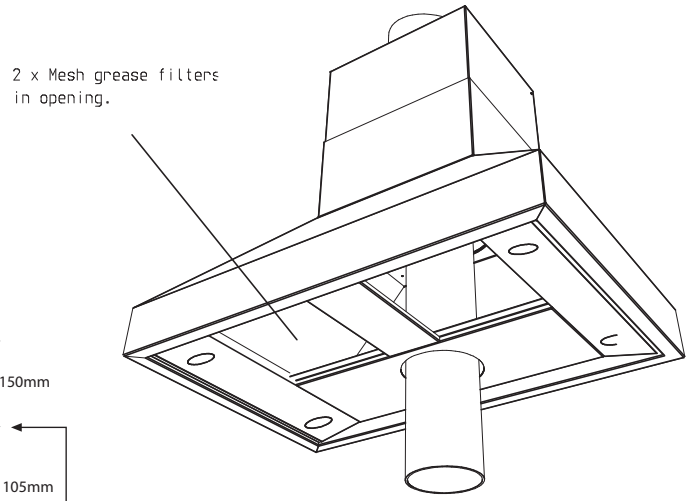

Installation Notes
- Install splash back and fix to wall
- Install return on Splash back
- Position stove / companion
- Plumb flue through ceiling/roof
- First length of flue to be sealed into the flue box using Castworks Sealant
- Install range hood
- Power supply required for range hood
- Install rest of flue
- The default end of triple flue to drop down into range hood as per drawing
- Install flashing

Hot Water Notes
- Use hemp and sealant to connect water pipes to stove
- Hot water position can be from side or rear

Companion notes
- Level companion to cooker
- Connect power / gas as required
- Use linking pieces to join to cooker

Comission Notes
- Remove all plastic wraps
- Remove plastic from hinge on hot plate
- Remove all utensils from inside ovens before lighting

Hearth Notes
- Hearth to extend 300mm in front of stove
- Hearth to be as wide as stove

PIVOT STOVE & HEATING Co PTY LTD
HEATING SPECIALIST SINCE 1876

1300 4 PIVOT / 1300 4 74868
sales@pivotstove.com.au